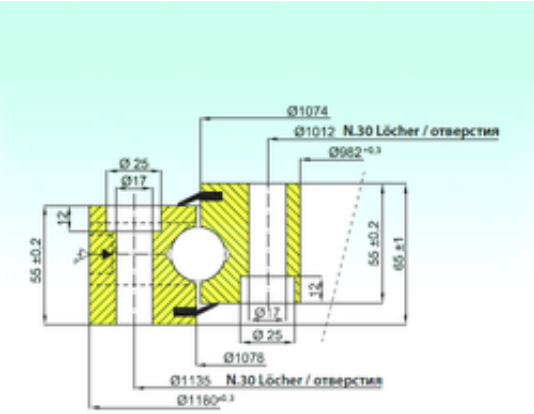

ISB NB1.25.1076.200-1PPN thrust ball bearings

Bearing No. NB1.25.1076.200-1PPN

Size	982x1180x65 mm
Bore Diameter	982 mm
Outer Diameter	1180 mm
Width	65 mm
d	982 mm
D	1180 mm

NB1.25.1076.200-1PPN Bearing 2D drawings and 3D CAD models